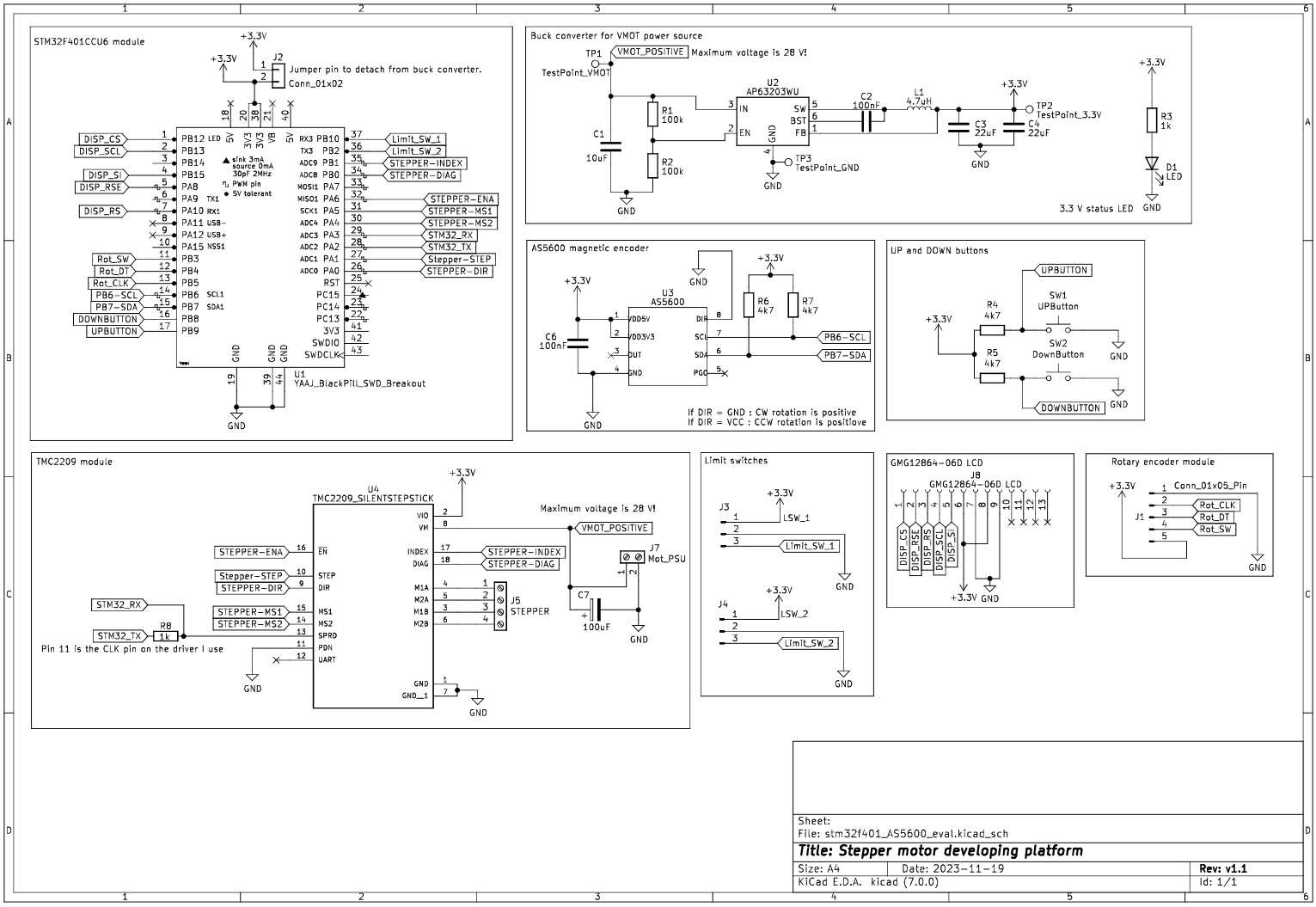

Sheet:
File: stm32f401_AS5600_eval.kicad_sch

Title: Stepper motor developing platform

Size: A4	Date: 2023-11-19	**Rev: v1.1**
KiCad E.D.A. kicad (7.0.0)		Id: 1/1